# Varibale Air Damper Motor

## Description

The Actuator is intended for ON-OFF and floating point controls in HVAC systems. It can easily mount on an 1/2” round or square shaft with solid screw sets. Angle of rotation is mechanically limited to 90 °. When the actuator reaches its maximum position, the device will automatically stop. An override lever is provided on the side to manually disengage the gear. Two mechanical stops are provided for extra adjustments.The device is equiped with a safety overload-proof to avoid burn-outs and allow consistent running time independent to the load.

Highlights:

- Simple Direct Mounting
- Stall-Proof Synchronous AC Motor
- Adjustable Angle of Rotation with Mech. Stops
- Manual Ove PRODUCT DESCRIPTION rride Lever
- Consistent running time
- Visual Position Indicator
- DM-8, DM-8-MOD

Stroke limitator(Stopper)

Big set screws

Small set screws

Hub adapter

Big set screw: That’s for the damper actuator installation bracket use.
Small set screw: For stroke limitator.
Hub adapter: If shaft is too small can use the hub adpter to fix the shaft hub adapter.

## Specifications

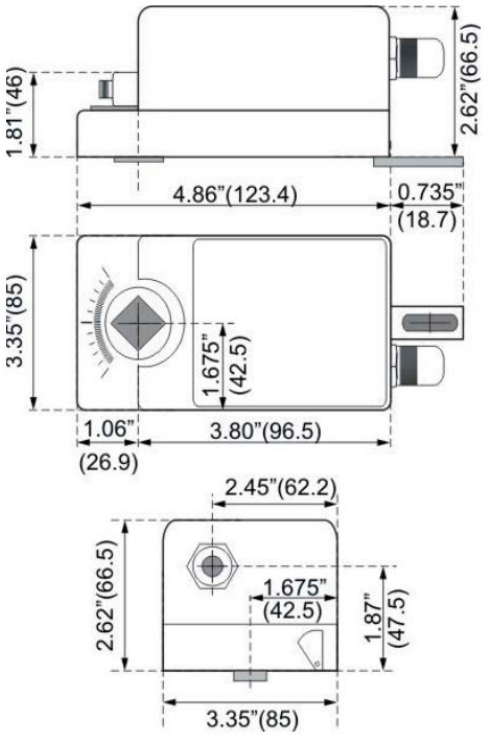


TEMCO Variable Air Damper Motor SRD02-0624Power

Supply …..…..... 24Vac ±20%, 50-60Hz
Power consumption …..... 2.5W
Recommended Wire Sizing .....3V
Control .....ON-OFF/ Floating point
Angle ..... max 900, with adjustable mech. stops
Torque .....6Nm
Running Time ..... 110s
Manual Override ..... external lever
Temperature:Ambient .....-30 ° C to +50° C
Storage .....-40° C to +80° C
Humidity ..... 5 to 95% RH
Position indication .....mechanical

### Applications

- Position Control of Dampers and Valves in HVAC systems

## Wiring Example and Installation

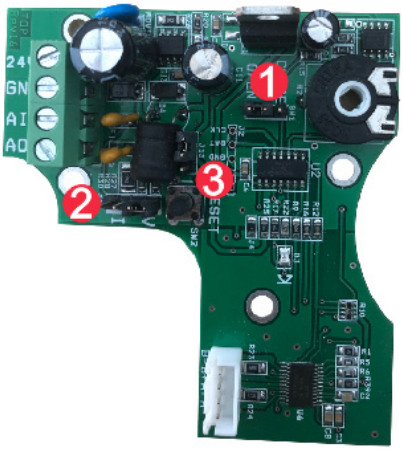


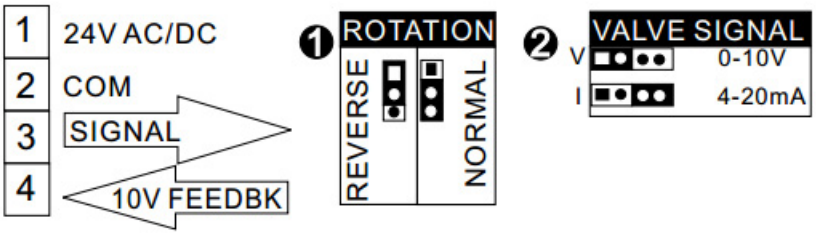


❸ HOLD BUTTON DOWN DURING POWER ON TO SET FULL STROKE

## PCB Setting Diagram

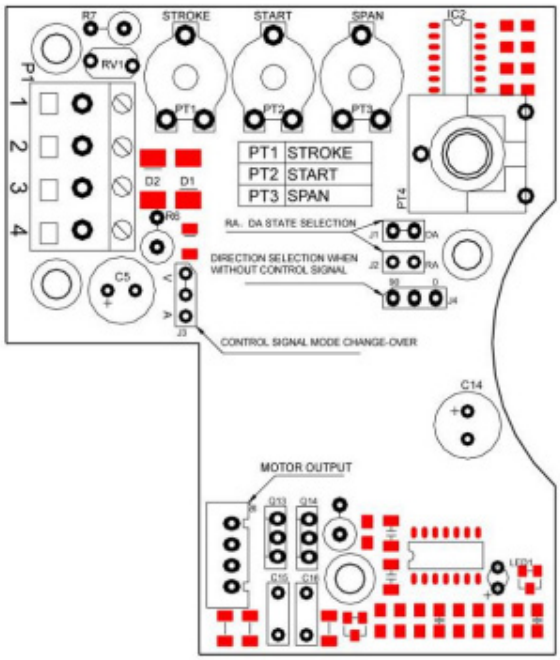


## Mounting and Usage

1 - Make sure Damper blade is at its fully closed position.

2 - From the bottom view, with the manual override lever pushed to the right.
Rotate actuator angle close to zero, depending on damper seal design.

3 - With Actuator angle set at almost zero, slide in actuator over shaft.

4. Install lower screw to secure the damper motor. Set the min and max position by adjusting the two end of travel stops.

**Note:**
- The actuator should be mounted in a non corrosive area or sealed against unwanted agents.